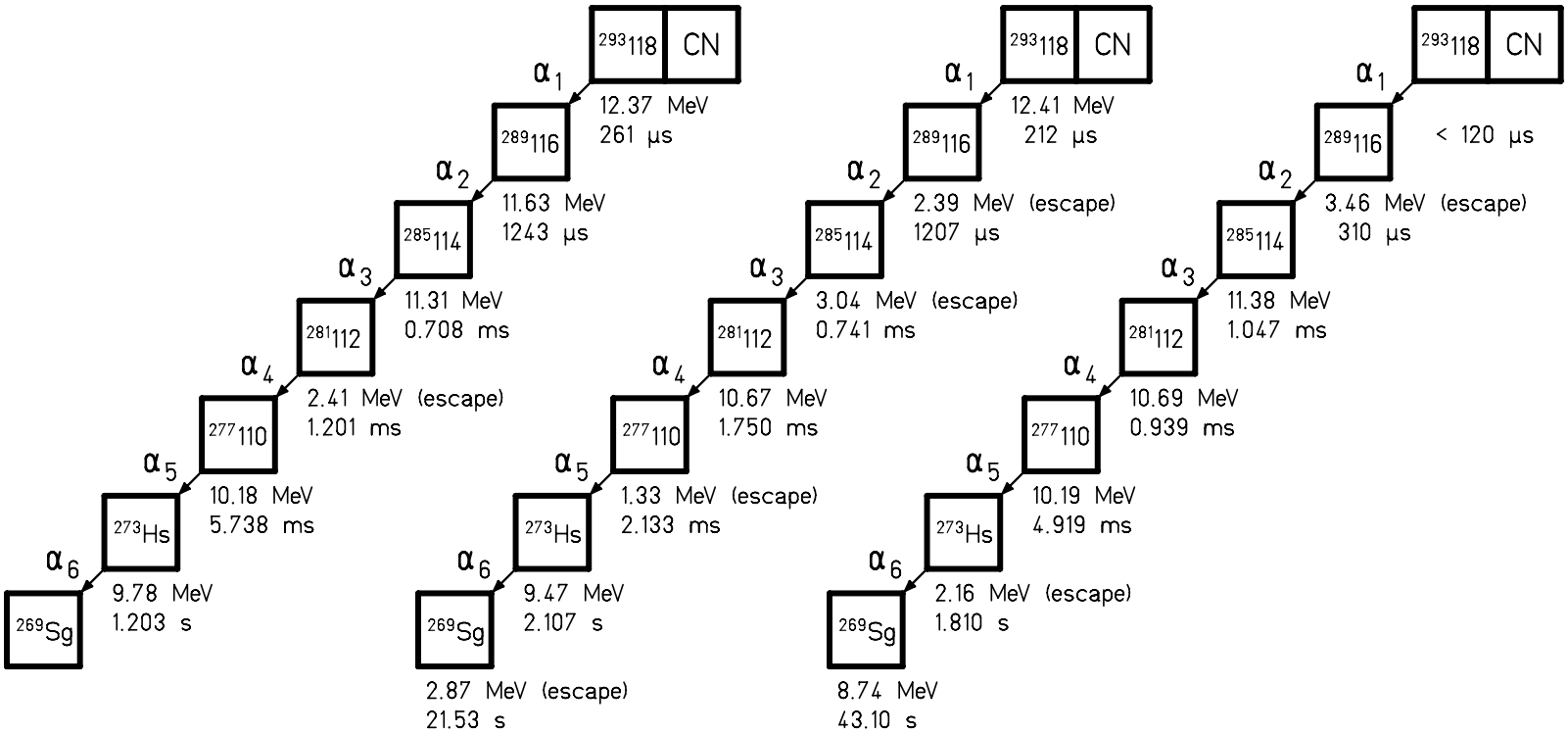
293118 CN
α1
12.37 MeV
261 μs
289116
α2
11.63 MeV
1243 μs
285114
α3
11.31 MeV
0.708 ms
281112
α4
2.41 MeV (escape)
1.201 ms
277110
α5
10.18 MeV
5.738 ms
273Hs
α6
9.78 MeV
1.203 s
269Sg
293118 CN
α1
12.41 MeV
212 μs
289116
α2
2.39 MeV (escape)
1207 μs
285114
α3
3.04 MeV (escape)
0.741 ms
281112
α4
10.67 MeV
1.750 ms
277110
α5
1.33 MeV (escape)
2.133 ms
273Hs
α6
9.47 MeV
2.107 s
269Sg
2.87 MeV (escape)
21.53 s
293118 CN
α1
< 120 μs
289116
α2
3.46 MeV (escape)
310 μs
285114
α3
11.38 MeV
1.047 ms
281112
α4
10.69 MeV
0.939 ms
277110
α5
10.19 MeV
4.919 ms
273Hs
α6
2.16 MeV (escape)
1.810 s
269Sg
8.74 MeV
43.10 s